MANHASSET-LAKEVILLE WATER DISTRICT

INC. VILLAGE OF PLANDOME HEIGHTS
TOWN OF NORTH HEMPSTEAD
NASSAU COUNTY, NEW YORK

INSTALLATION OF WATER MAINS & APPURTENANCES
GRANDVIEW CIRCLE & SUMMIT DRIVE

MLWD 15-51

CONTRACT NO. 2016-01

DECEMBER 2015

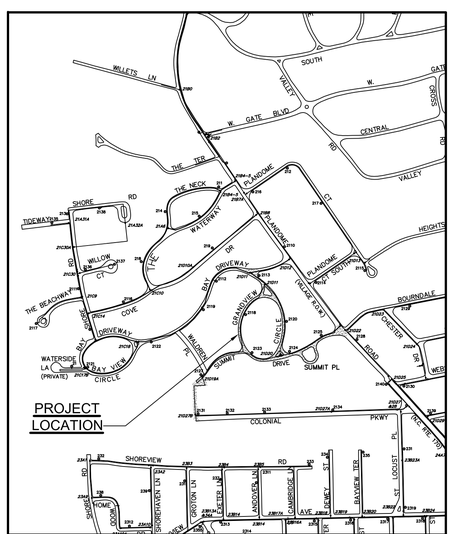

LOCATION MAP
SCALE: 1" = 500'

BOARD OF COMMISSIONERS

Brian J. Morris, Chairman
Donald T. O'Brien, Treasurer
Mark S. Sauvigne, Secretary

SUPERINTENDENT

Paul J. Schrader, P.E.

ATTORNEY

Ackerman, Levine, Cullen,
Brickman and Limmer, LLP

DRAWING LIST

INFORMATIONAL DRAWINGS

T 0.0 COVER SHEET
WM 0.0 GENERAL NOTES & LEGEND

WATER MAIN DRAWINGS

WM 1.0 WATER MAIN PLAN
WM 1.1 WATER MAIN PLAN
WM 1.2 WATER MAIN PLAN
WM 2.0 PIPING DETAILS
WM 2.1 RESTORATION DETAILS

NASSAU COUNTY HEALTH DEPARTMENT APPROVAL

H2M architects + engineers

538 Broad Hollow Road
4th Floor East
Melville, NY 11747
P:(631)756-8000
F:(631)694-4122

Melville, NY 11747
Albany, NY 12205
New York, NY 10001
White Plains, NY 10604
New City, NY 10956
Parsippany, NJ 07054
Howell, NJ 07731

PROJECT #: MLWD 15-51
DATE: NOVEMBER 2015
DESIGNED BY: DJR
DRAWN BY: DJR
CHECKED BY:
REVIEWED BY:

SEAL

*ALTERATION OF THIS DOCUMENT EXCEPT BY A LICENSED PROFESSIONAL IS UNLAWFUL

CLIENT

Manhasset-Lakeville Water District

GRANDVIEW CIRCLE & SUMMIT DRIVE

REGULATORY REVIEW

SHEET #

T0.0

M:\cadd\MLWD\1551 – Grandview Circle\01_T1.dwg Last Modified: Dec 29, 2015 – 2:31pm Plotted on: Dec 30, 2015 – 9:51am By smirra

GENERAL NOTES

1. NOTIFICATION AND MISCELLANEOUS

(a) Notify Superintendent Paul Schrader, P.E. of the Manhasset-Lakeville Water District at (516) 466-4416 prior to starting work, connecting to existing water main, chlorinating and flushing of newly installed water main.

(b) The Contractor must provide advance notice of excavation to each operator of underground facilities listed in the Central Registry of the Town of North Hempstead, per Industrial Code 753 (cited as 16 NYCRR 753).

(c) The Contractor shall coordinate all shutdowns of existing mains with the Manhasset-Lakeville Water District and notify all consumers of shutdowns at least twenty-four (24) hours in advance of, and immediately prior to shutdown.

(d) Location and sizes of all existing water mains and valves shown on the drawings were determined from old records or field inspections. The actual sizes, locations and types shall be verified by the Contractor in the field.

(e) Locations of all underground utilities, gas mains, electric and telephone conduits, and storm drains were obtained from old maps, surveys, drawings or records supplied by others or field inspections performed by utility companies and others. The Manhasset-Lakeville Water District and the Consulting Engineers do NOT guarantee or accept responsibility for any damage to such facilities due to discrepancies in location and size shown on the Plans, nor will any compensation be made to the Contractor for any inconvenience caused him by encountering the aforementioned utilities which are not shown, or incorrectly shown on the plans.

(f) The Contractor shall perform daily clean-up operations which include sweeping of roadways, sidewalks, etc., removal of debris and excess construction material, all to the satisfaction of the Engineer and the proper road authority.

(g) The Contractor shall conform to the standard traffic requirements of the New York State Manual of Uniform Traffic Control Devices for work in Public Roadways.

(h) Miscellaneous work including protection of existing curbing; hand-digging around and bracing of poles and signs; removing and replacing mailboxes, signs, etc.; protection of underground utilities; crossing under, over or adjacent to underground utilities, surface or subsurface structures; sheeting required due to location of water main and close proximity of existing utilities, curbs, etc.; protection of pedestrian and vehicular traffic, etc., shall be under Item 1.

(i) Drawings do not include necessary components for construction safety. The Contractor should have his insurance company safety engineer visit the job site periodically.

2. SITE PROTECTION AND MISCELLANEOUS WORK

The Contractor shall perform, but not be limited to, the following miscellaneous work under Item 1 to install the water main at the proper location:

(a) The Contractor shall place a sufficiency of yellow, Type C steady burn lights on or near any work accessible to the public, and keep them burning sunset to sunrise; it shall erect suitable railings or barriers on the work as required and deemed necessary for the safety of the work.

Under no conditions are flares and mechanical equipment to be left on or operating overnight. ALL EXCAVATIONS ARE TO BE BACKFILLED BEFORE CLOSE OF DAY'S WORK. The entire work area is to be left in a safe condition.

The proposed project is in the vicinity of a developed area and it is the Contractor's responsibility to ensure that sufficient safety precautions are taken during the completion of this contract. Consequently, the Contractor will be responsible for any safety related problems that may occur.

The District reserves the right (after 24 hours notice in writing) to remedy any neglect on the part of the Contractor regarding the protection of the work which may come to its attention; except that in cases of emergency, it shall have the right to remedy any neglect without notice; and in either case to deduct the cost of such remedy from money due to the Contractor.

(b) Tunneling under or around existing drains, utilities, manholes or other irremovable structures.

(c) Hand digging around and bracing any poles, signs or other existing surface or subsurface structures.

(d) Tunneling under and protection of concrete curbs.

(e) Any sheeting required due to the location of the water main and proximity of existing utilities, curbs, sidewalks, driveway aprons, etc.

(f) Providing protection of underground utilities such as drains, electrical cables, gas mains, conduits, sewer and sewer laterals, etc., including additional costs to cross under, over or adjacent to these underground utilities.

(g) Installation and removal of temporary blow-offs for testing purposes including piping, curb valve and boxes.

(h) Installation of concrete blocking, steel tie-rods and retainer glands at all mechanical connections.

(i) Installation of steel road plates to maintain traffic and protect open excavations during construction.

3. PIPE

C.L.D.I. indicates "Cement Lined Ductile Iron" water main, thickness class as indicated, with double thickness cement lining and push-on joints. A bituminous coating shall be applied to the outside and inside of all pipes by the manufacturer. Two (2) serrated silicon bronze wedges shall be driven in at each joint for electrical continuity.

THICKNESS CLASS FOR PIPE		
PIPE SIZES (INCHES)	DUCTILE IRON	
	THICKNESS SPECIAL CLASS	THICKNESS (INCHES)
6"	54	.37
8"	54	.39

4. COVER

Pipe shall be installed to provide the following minimum cover to finished grade:

6-inch diameter - 4 feet, 0 inches
8-inch diameter - 4 feet, 0 inches

5. DRAINAGE PIPES AND SANITARY SEWERS

The water main shall be installed to provide a minimum 10- foot horizontal clearance between the main and both sanitary sewers and storm drains.

Where water mains cross sanitary sewers, provide an 18-inch minimum vertical clearance.

Water mains crossing drainage piping shall be laid (18-inch minimum clearance vertically) under the drainage pipe unless specifically indicated to cross over on the Plans.

6. CHLORINATION

Water mains shall be chlorinated and tested in accordance with Nassau County Department of Health. The contractor is required to properly chlorinate all new piping and appurtenances prior to activation of new mains.

The Nassau County Health Department requires liquid chlorination of mains.

7. PRESSURE TESTING & BACTERIOLOGICAL TESTING

Water mains shall be chlorinated and tested in accordance with the latest edition of AWWA Standard C651 and the contract specifications. Following the "cook" period, the main shall be flushed and pressure tested. The pressure test(s) shall be performed in accordance with the latest edition of AWWA Standard C600 with the following exception; no leakage will be allowed in new D.I.P.. Following satisfactory pressure test results, the new main shall be flushed again until a chlorine residual representative of the typical operating parameters of the Water District is achieved and shall sit for a minimum of 24 hours prior to the collection of the first set of samples. The second set of samples shall be taken at least 24 hours after the first, and shall be representative of the water that has been in the pipe for 24 hours.

If any positive bacteriological sample results occur, the contractor shall cancel subsequent sampling and re-chlorinate all new piping before resuming sampling procedures.

Contractor shall furnish and install a 1" tap where directed by the engineer for pressure and bacteriological testing. When tests are satisfactorily completed, the copper tubing shall be removed.

8. SPECIAL CASTINGS

Cement-lined mechanical joint fittings shall be used with "push-on" joint pipe. Retainer glands shall be installed on all mechanical connections. In addition, two 3/4" galvanized steel tie rods with anchoring clamps and eye-bolts shall be utilized at all M.J. fittings. Duc-lugs shall not be permitted.

Both compact and full-bodied fittings are approved for use. Payment shall be made under Item 2 based on the actual weights of the fittings used as listed by the manufacturer.

9. VALVES AND VALVE BOXES

New mechanical joint gate valves and sliding-type valve boxes shall be installed at locations indicated on the plans, for sizes up to 12-inch in diameter. The contractor shall be aware that most of the existing valves in the M.L.W.D. are butterfly style valves. All valve boxes shall be three-piece ductile iron sliding type.

10. CONNECTION TO EXISTING MAIN

Cut-ins to existing water mains to make connections shall be done in accordance with the District specifications.

The final connection of new water mains to existing mains shall not be performed until after the new main has been satisfactorily pressure and bacteriologically tested.

The contractor shall plan and coordinate the connections to the existing main with the affected consumers.

11. TRENCH COMPACTION

Trench compaction on all water main trenches shall be by the mechanical tamping method. Jetting of trenches will not be permitted.

12. APPROVAL

All work in conjunction with the water services, water main, appurtenances and restoration shall be performed in accordance with the Standard Specifications of the Manhasset-Lakeville Water District, to the approval of the Engineer and the District and in accordance with the New York State Sanitary Code.

The transfer of water services to and activation of the new water mains is dependent on the receipt of "Completed Works" from the Nassau County Dept. of Health Services.

13. HYDRANTS

Hydrants shall be safety flange, "O" ring seal, 4-1/2" internal valve opening, drain type, with two 2-1/2" hose nozzles and one 4-1/2" steamer connection in accordance with the Manhasset-Lakeville Water District's standards. Threads shall be National Standard for both the 2-1/2" hose nozzle connections and 4-1/2" pumper connection. Colors shall be yellow barrel with reflecting white top. All new Hydrants shall be bagged until after activation.

All hydrants shall have a minimum 5-foot depth of bury, 6-inch inlet with mechanical joint end. All hydrant valves shall be anchored to tees by means of mechanical joint anchoring fittings or tie rods. All hydrants shall be strapped or rodded to the hydrant valve or hydrant tee. All hydrant branches shall be 6-inch, cement-lined, ductile iron pipe. Furnish and install 3 cubic feet of well-graded, washed gravel from the bottom of hydrant to 1 foot above the bottom flange.

Under the bid price for ITEM 4D - Removal of Existing Hydrants, the contractor shall remove the existing hydrant and either deliver it to the District (3-spud) or dispose of (2-spud), cap existing branch piping with M.J. fittings and concrete blocking, closing of existing valve and removal of valve box (where applicable).

14. WATER MAIN SHUTDOWNS

The Water Main Contractor shall not operate any existing valves or hydrants. The Water District shall be notified 24 hours prior to the commencement of water main installation and 24 hours prior to requiring a shutdown on existing mains.

15. TEMPORARY ASPHALT PAVEMENT

Temporary asphaltic pavement shall consist of 2" thickness (compacted) hot plant mix and shall be installed in all areas where existing asphalt roadways, driveways, and sidewalks are removed to facilitate installation of new water main. All costs for the installation, maintenance, and removal of temporary asphalt pavement shall be included under Item 29. The Contractor shall maintain temporary asphalt until final restoration is complete at no additional cost.

16. PAVEMENT RESTORATION

Final pavement restoration of Town of North Hempstead Roadways (Colonial Parkway and Plandome Road) shall consist of 6 inches of crushed stone or RCA base, 6 inches of compacted Type 1A dense binder asphalt and 2 inches of compacted Type 1AC top course or as directed by the road agency. Where the existing pavement is thicker than that specified, the contractor shall match the existing thickness. Costs to be included under ITEM 10B.

Final pavement restoration of Village of Plandome Heights Roadways (Summit Drive) shall consist of 5 inches of compacted Type 1A binder course or as directed by the road agency. Where the existing pavement is thicker than that specified, the contractor shall match the existing thickness. Costs to be included under ITEM 10B.

Limits of the final asphalt restoration shall consist of the trench width plus a minimum of a 12-inch cut-back on each side of trench. The minimum patch width is 5' wide. Where the edge of the paving limits fall within three feet of an existing curb, final restoration shall include up to the face of curb. The contractor shall minimize the limits of restoration at points of connection to existing water mains.

The contractor shall replace all pavement markings and line stripping disturbed as a result of the water main installation in accordance with the contract specifications and appropriate road agency. All costs shall be included in ITEM 10B.

17. FINAL RESTORATION

All areas disturbed during construction shall be permanently restored at the completion of the project, including but not limited to asphalt and concrete roadways/driveways, concrete gutters, sidewalks, and grass/landscape areas.

18. WORKING HOURS

Working hours within the Village of Plandome Heights and Town of North Hempstead shall be Monday through Friday, 8:00 a.m. - 4:30 p.m unless otherwise noted.

19. PERMITS

The contractor shall make application and bear all costs of obtaining the Village of Plandome Heights and Town of North Hempstead road opening permits. All permits shall be in the name of the water main Contractor.

20. MAINTENANCE & PROTECTION OF TRAFFIC (M.P.T.)

All costs for M.P.T., including flagmen, barrels, cones, signage, & arrow boards shall be included in the bid prices for ITEM 1. MPT requirements shall be as stipulated in the appropriate road permits and be in accordance with the Manual of Uniform Traffic Control Devices. It is required that local traffic and emergency vehicles be granted access to all roads and residences along the proposed water main route at all times. The use of arrow boards & multiple flagmen may be required. The contractor shall provide the road agency with a M.P.T. plan suitable for issuance of the road opening permit and submit to the engineer for record prior to the commencement of work.

21. INCOMPLETE UTILITY INFORMATION

The contractor shall test hole and locate top and bottom of all marked and known buried utility facilities, including Water, prior to performing any excavation. No additional payment will be made for delays associated with hitting of marked or mis-marked utilities due to lack of digging the proper size, quantity and depth of test holes. Digging of test holes shall be included in the bid prices for ITEM 1.

22. ADDITIONAL EXCAVATION & SHEETING

The contractor shall be responsible for installing sheeting and bracing in accordance with OSHA requirements. All costs associated with the installation of sheeting, bracing, and additional excavation required to install the new main, due to the depth or proximity of existing utilities, including the existing water mains and services, shall be included in the bid price for Item 1.

No additional payment shall be made for utility crossings where the depth of cover of the new main exceeds the minimum requirement of 4'-0".

23. WATER SERVICES

ITEM 30: Reconnection of existing water service lines, including new copper tubing, corporation stop, curb stop with box and rod and reconnection to existing service line on the house side of the curb stop. The existing curb box shall be removed and disposed of following reactivation of new main and all grass areas restored with sod. The contractor shall tunnel the curb and road when applicable. All costs for the installation of the new service line up to and the curb stop and restoration of lawn areas to be included in the bid price for Item 30.

ITEM 30R: Reconnection of existing water service lines, including new copper tubing, corporation stop, and reconnection to existing service line on the service side of the curb stop. The contractor shall tunnel the curb and road when applicable. All costs for the installation of the new service line up to and the curb stop and restoration of lawn areas to be included in the bid price for Item 30R.

LEGEND

EXISTING/PROPOSED CONCRETE CURB
EXISTING CONCRETE CURB TO BE REMOVED
EXISTING DROP CURB
EXISTING/PROPOSED BELGIUM BLOCK CURB
EXISTING/PROPOSED CONCRETE CURB W/GUTTER
EXISTING EDGE OF ASPHALT PAVEMENT
EXISTING BURIED CONCRETE BASE
EXISTING/PROPOSED CONCRETE SIDEWALK
EXISTING DRAINAGE PIPE
PROPOSED DRAINAGE PIPE
EXISTING FENCE
EXISTING CONTOUR
EXISTING UNDERGROUND TELEPHONE LINE
EXISTING UNDERGROUND FIBER OPTIC TELEPHONE LINE
EXISTING SEWER MAIN
PROPOSED SEWER MAIN
EXISTING SEWER HOUSE CONNECTION LINE
PROPOSED SEWER HOUSE CONNECTION LINE
EXISTING GAS MAIN
EXISTING GAS SERVICE
EXISTING UNDERGROUND ELECTRIC
EXISTING UNDERGROUND ELECTRIC SERVICE
EXISTING FORCE MAIN
EXISTING UNDERGROUND CABLE TELEVISION
EXISTING UNDERGROUND TRAFFIC SIGNAL CABLE OR TRAFFIC SENSING LINE
PROPOSED MAP LINE
EXISTING PROPERTY LINE
PROPOSED PROPERTY LINE
PROPOSED RIGHT-OF-WAY LINE
EXISTING RIGHT-OF-WAY LINE
EXISTING/PROPOSED EASEMENT LINE
EXISTING/PROPOSED ROOF DRAIN LINE
EXISTING/PROPOSED RETAINING WALL
EXISTING DIRT TRAIL OR DIRT ROAD
EXISTING EDGE OF WOODS
TOP OF CURB ELEVATION / BOTTOM OF CURB ELEVATION
SPOT ELEVATION
INVERT ELEVATION & RIM ELEVATION OF MANHOLE
EXISTING GAS VALVE
EXISTING UTILITY POLE
EXISTING SANITARY SEWER MANHOLE
PROPOSED SANITARY SEWER MANHOLE
EXISTING BLOW-OFF PIT
EXISTING LEACHING POOL
PROPOSED LEACHING POOL
EXISTING CATCH BASIN
PROPOSED CATCH BASIN
EXISTING SIGN
EXISTING DRAINAGE MANHOLE
PROPOSED DRAINAGE MANHOLE
EXISTING TELEPHONE MANHOLE
EXISTING ELECTRIC MANHOLE
EXISTING CLEANOUT
EXISTING DRAINAGE INLET (CIRCULAR)
EXISTING DRAINAGE INLET (RECTANGULAR)
BOLLARD
FLAG POLE
PEDESTRIAN RAMP
TRAFFIC CONTROL BOX
TRAFFIC CONTROL POLE OR TRAFFIC LIGHT SUPPORT POLE
CABLE BOX
LARGE ROCK OR BOULDER
SMALL ROCK OR BOULDER
ELECTRIC BOX
GUIDE POLE
GROUND LIGHT
SPRINKLER HEAD
BUSH
FIRE ALARM BOX
MAIL BOX
MONUMENT
STAKE
NAIL
HANDICAP SYMBOL
DECIDUOUS TREE
EVERGREEN TREE
WOODED AREA
SHRUB
LIGHT POLE
HEDGE
EXISTING WATER MAIN
ABANDONED WATER MAIN
EXISTING WATER SERVICE
EXISTING WATER VALVE
EXISTING HYDRANT ASSEMBLY
EXISTING TEE
EXISTING CROSS
EXISTING REDUCER
EXISTING PLUG
EXISTING PLUG & BLOW-OFF
EXISTING BENDS (ANGLES VARY)
EXISTING SLEEVE
EXISTING CURB STOP
EXISTING WATER METER
PROPOSED WATER MAIN W/ OFFSET BENDS
PROPOSED WATER SERVICE
PROPOSED WATER VALVE
PROPOSED HYDRANT ASSEMBLY
PROPOSED TEE
PROPOSED CROSS
PROPOSED REDUCER
PROPOSED PLUG
PROPOSED PLUG & BLOW-OFF
PROPOSED BENDS (ANGLES VARY)
PROPOSED SLEEVE
PROPOSED CURB STOP
PROPOSED WATER METER
PROPOSED CONCRETE BLOCKING

H 2 M architects + engineers

538 Broad Hollow Road
4th Floor East
Melville, NY 11747
P:(631)756-8000
F:(631)694-4122

Melville, NY 11747
Albany, NY 12205
New York, NY 10001
White Plains, NY 10604
New City, NY 10956
Parsippany, NJ 07054
Howell, NJ 07731

CONSULTANTS:

MARK	DATE	DESCRIPTION

PROJECT #: MLWD 15-51
DATE: DECEMBER 2015
DESIGNED BY: DJR
DRAWN BY: SLM
CHECKED BY: REVIEWED BY:

SEAL

"ALTERATION OF THIS DOCUMENT EXCEPT BY A LICENSED PROFESSIONAL IS ILLEGAL"

CLIENT

Manhasset-Lakeville Water District

Installation of Water Mains & Appurtenances

Grandview Circle & Summit Drive

CONTRACT

MLWD CONTRACT NO. 2016-02

STATUS

REGULATORY REVIEW

SHEET TITLE

GENERAL NOTES & LEGEND

SHEET #

WM 0.0

M:\cadd\MLWD\1551 – Grandview Circle\02_GENERAL NOTES.dwg Last Modified: Dec 30, 2015 – 9:56am Plotted on: Dec 30, 2015 – 10:02am By smirro

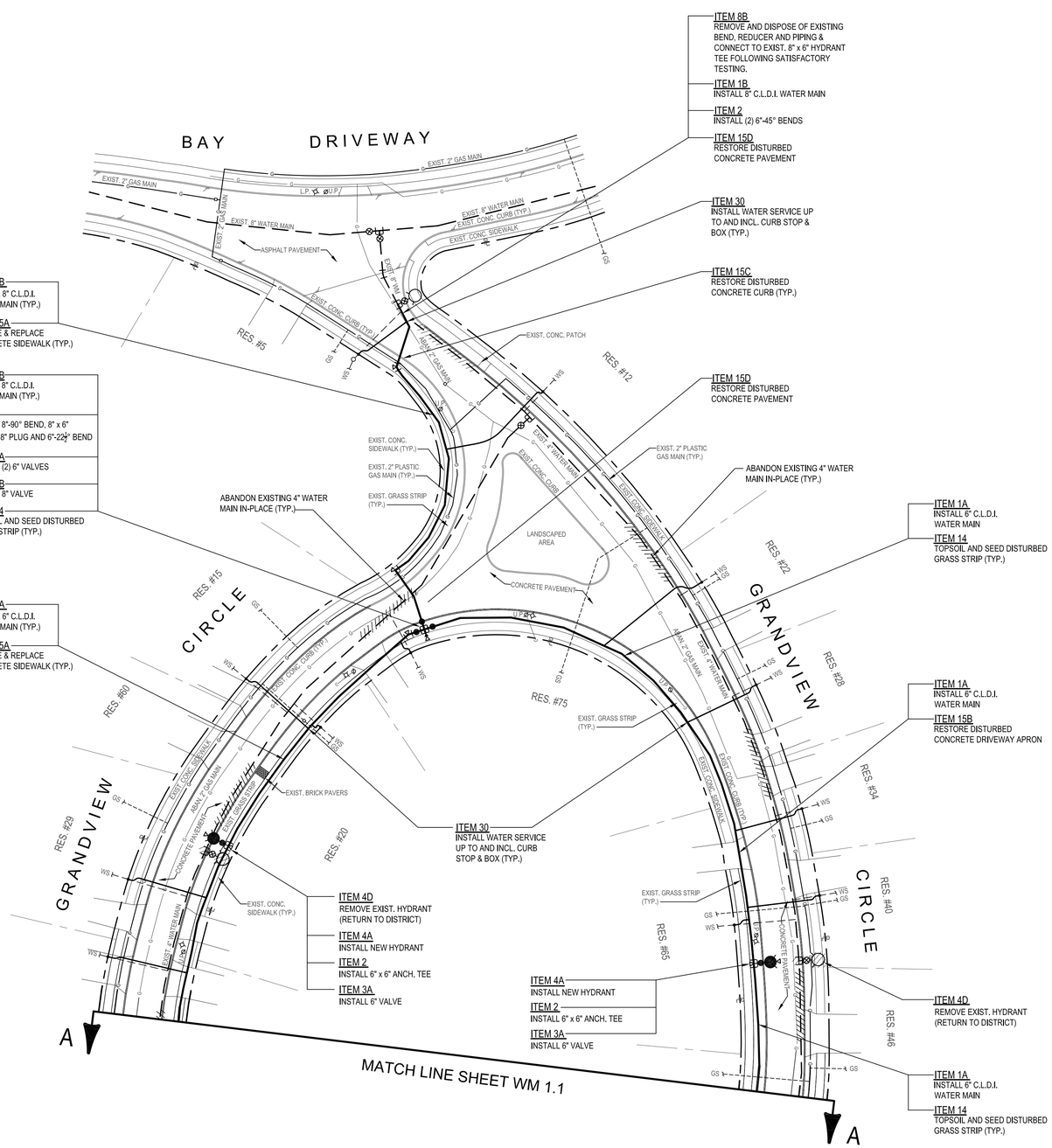

PLAN
SCALE:1"=30'
N
30 20 10 0 30

H 2 M architects + engineers

538 Broad Hollow Road
4th Floor East
Melville, NY 11747
P:(631)756-8000
F:(631)694-4122

Melville, NY 11747
Albany, NY 12205
New York, NY 10001
White Plains, NY 10604
New City, NY 10956
Parsippany, NJ 07054
Howell, NJ 07731

CONSULTANTS:

MARK	DATE	DESCRIPTION

PROJECT #: MLWD 15-51
DATE: DECEMBER 2015
DESIGNED BY: DJR
DRAWN BY: SLM
CHECKED BY: | REVIEWED BY:
SEAL
ALTERATION OF THIS DOCUMENT EXCEPT BY A LICENSED PROFESSIONAL IS ILLEGAL

CLIENT
Manhasset-Lakeville Water District

EXCELSIOR

Installation of Water Mains & Appurtenances

Grandview Circle & Summit Drive

CONTRACT
MLWD CONTRACT NO. 2016-02

STATUS
REGULATORY REVIEW

SHEET TITLE
WATER MAIN PLAN

SHEET #
WM 1.0

M:\cadd\MLWD\1551 – Grandview Circle\03_WM PLAN.dwg Last Modified: Dec 30, 2015 – 10:53am Plotted on: Dec 30, 2015 – 10:57am By smirre

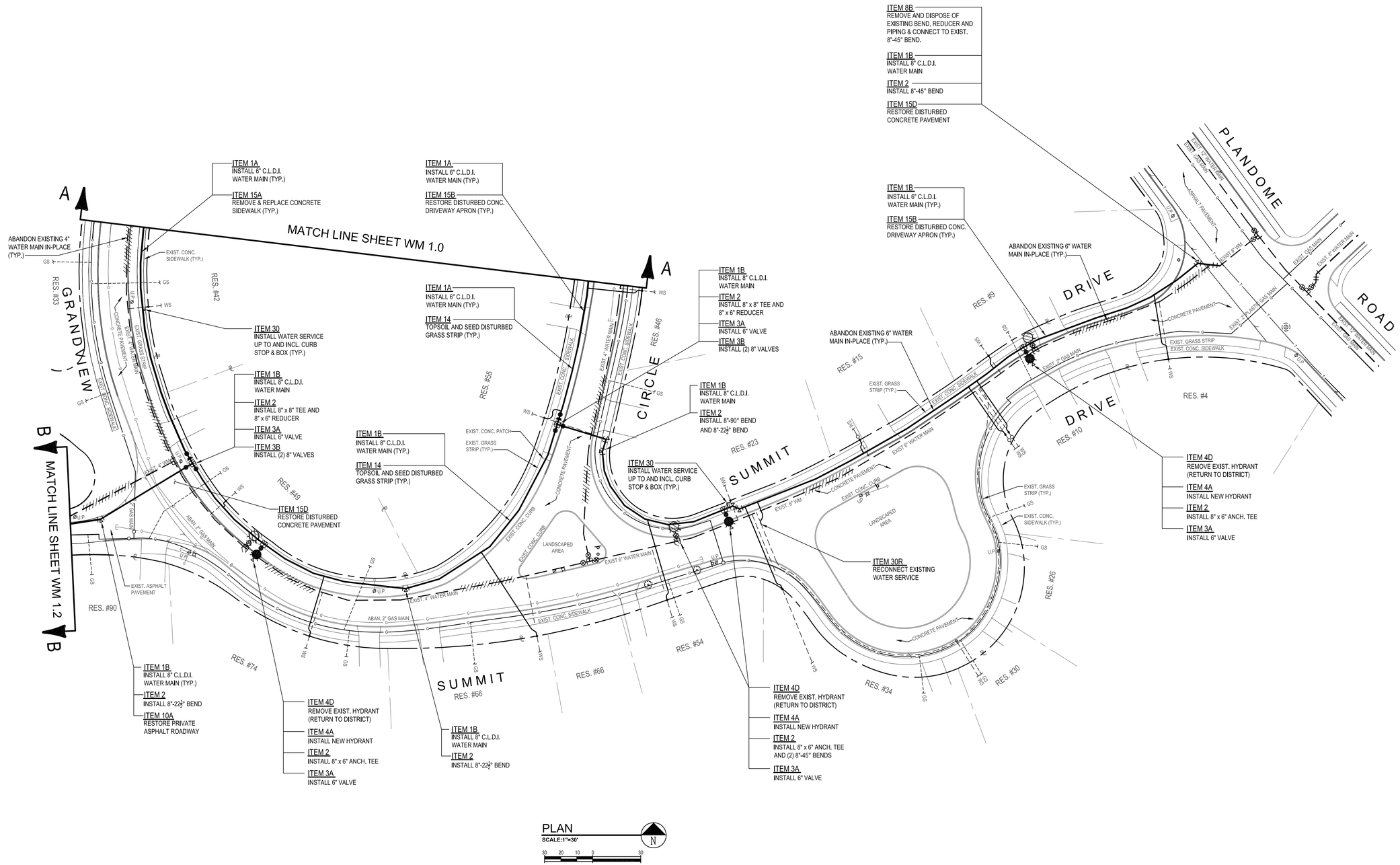

H 2 M architects + engineers

538 Broad Hollow Road
4th Floor East
Melville, NY 11747
P:(631)756-8000
F:(631)694-4122

Melville, NY 11747
Albany, NY 12205
New York, NY 10001
White Plains, NY 10604
New City, NY 10956
Parsippany, NJ 07054
Howell, NJ 07731

CONSULTANTS:

MARK	DATE	DESCRIPTION

PROJECT #: MLWD 15-51

DATE: DECEMBER 2015

DESIGNED BY: DJR

DRAWN BY: SLM

CHECKED BY: | REVIEWED BY:

SEAL

"ALTERATION OF THIS DOCUMENT EXCEPT BY A LICENSED PROFESSIONAL IS ILLEGAL"

CLIENT

Manhasset-Lakeville Water District

EXCELSIOR

Installation of Water Mains & Appurtenances

Grandview Circle & Summit Drive

CONTRACT

MLWD CONTRACT NO. 2016-02

STATUS

REGULATORY REVIEW

SHEET TITLE

WATER MAIN PLAN

SHEET #

WM 1.1

M:\cadd\MLWD\1551 – Grandview Circle\03_WM PLAN.dwg Last Modified: Dec 30, 2015 – 10:53am Plotted on: Dec 30, 2015 – 10:58am By smirro

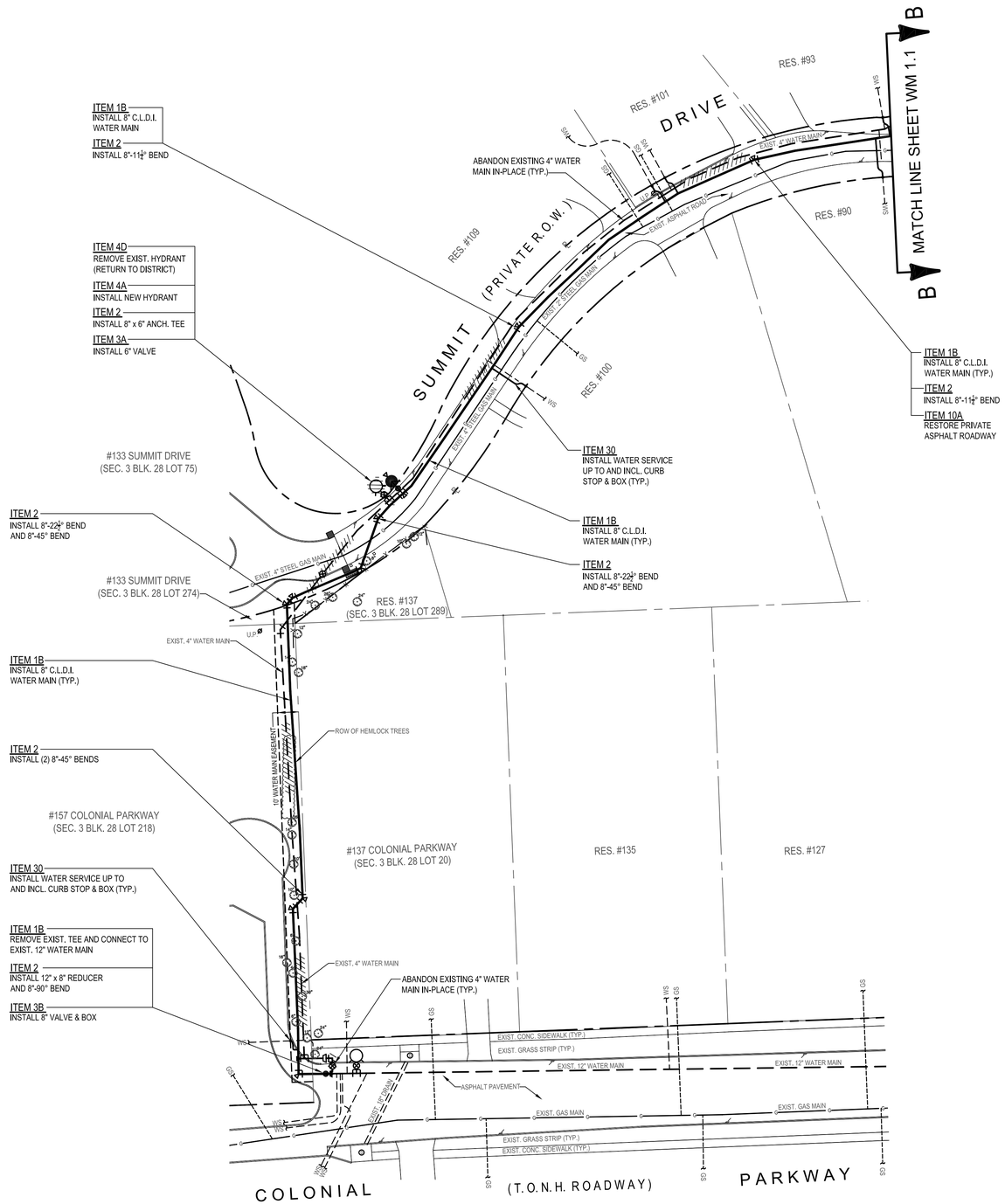

PLAN
SCALE:1"=30'
30 20 10 0 30
N

H 2 M architects + engineers

538 Broad Hollow Road
4th Floor East
Melville, NY 11747
P:(631)756-8000
F:(631)694-4122

Melville, NY 11747
Albany, NY 12205
New York, NY 10001
White Plains, NY 10604
New City, NY 10956
Parsippany, NJ 07054
Howell, NJ 07731

CONSULTANTS:

MARK	DATE	DESCRIPTION

PROJECT #: MLWD 15-51
DATE: DECEMBER 2015
DESIGNED BY: DJR
DRAWN BY: SLM
CHECKED BY:
REVIEWED BY:

SEAL

"ALTERATION OF THIS DOCUMENT EXCEPT BY A LICENSED PROFESSIONAL IS ILLEGAL"

CLIENT

Manhasset-Lakeville Water District

EXCELSIOR

Installation of Water Mains & Appurtenances

Grandview Circle & Summit Drive

CONTRACT

MLWD CONTRACT NO. 2016-02

STATUS

REGULATORY REVIEW

SHEET TITLE

WATER MAIN PLAN

SHEET #

WM 1.2

M:\cadd\MLWD\1551 – Grandview Circle\03_WM PLAN.dwg Last Modified: Dec 30, 2015 – 10:53am Plotted on: Dec 30, 2015 – 10:58am By smirro

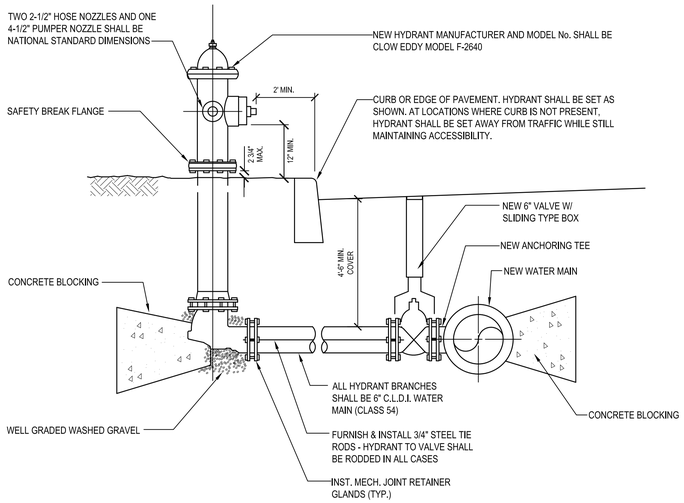

1 Typical Hydrant Installation Detail
NO SCALE

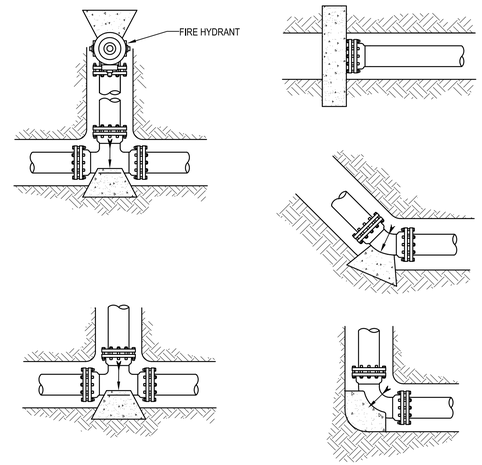

2 Thrust Block Location Details
NO SCALE

NOTES:

1. CONCRETE BLOCKING SHALL BE APPLIED ON ALL PIPE LINES 4-INCH IN DIAMETER AND LARGER AT ALL TEES, PLUGS, CAPS, AND AT BENDS DEFLECTING 22 1/2 DEGREES OR MORE. BLOCKING SHALL BE OF CONCRETE OF A MIX HAVING A COMPRESSIVE STRENGTH OF NOT LESS THAN 2,000 PSI, AND BLOCKING SHALL BE PLACED BETWEEN SOLID GROUND AND THE FITTING TO BE ANCHORED. THE BLOCKING SHALL BE PLACED SO THAT THE PIPE AND FITTING JOINTS WILL BE ACCESSIBLE FOR REPAIR.

2. THE SQUARE FOOT BEARING AREA OF THE BLOCKING ON SOLID GROUND SHALL BE INDICATED IN THE TABLE FOLLOWING OR AS INDICATED BY THE ENGINEER:

PIPE SIZE	DEAD END OR TEE	90° BEND	45° BEND	22 1/2° BEND
4"	1	1-1/2	3/4	1/2
6"	2	3	2	1
8"	4	5-1/2	3	1
10"	6	8-1/2	4-1/2	2-1/2
12"	9	12	6-1/2	3-1/2
16"	12	15-1/2	8-1/2	4-1/2
20"	15	18-1/2	10-1/2	5-1/2

3. FOR ALL VERTICAL BENDS, 3/4-INCH DIAMETER TIE RODS AND PIPE CLAMPS OR RETAINER GLANDS SHALL BE PROVIDED IN ADDITION TO THE CONCRETE BLOCKING SPECIFIED ABOVE FOR BENDS DEFLECTING 22-1/2 DEGREES OR MORE.

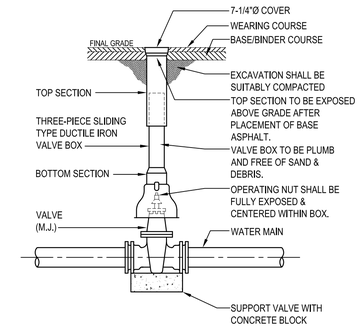

3 Valve Box Installation Detail
NO SCALE

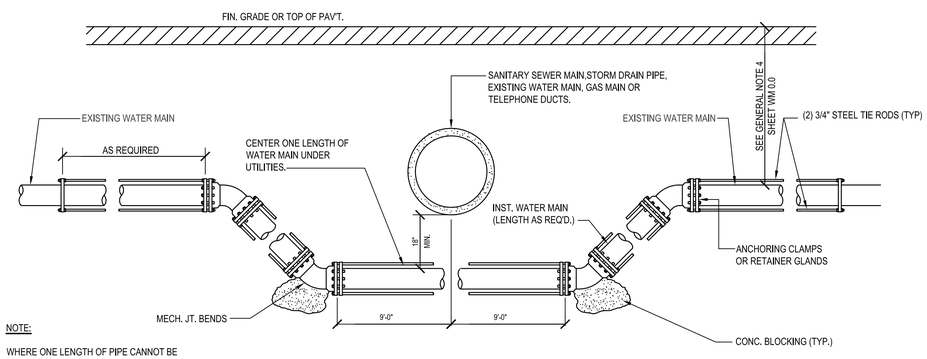

NOTE:

WHERE ONE LENGTH OF PIPE CANNOT BE CENTERED UNDER THE UTILITY CROSSING, THE CONTRACTOR SHALL MAXIMIZE THE LENGTH OF HORIZONTAL PIPE BELOW THE UTILITY IN ORDER TO PROVIDE THE MAXIMUM SEPARATION FROM OFF-SET JOINTS

4 Water Main Offset Detail
NO SCALE

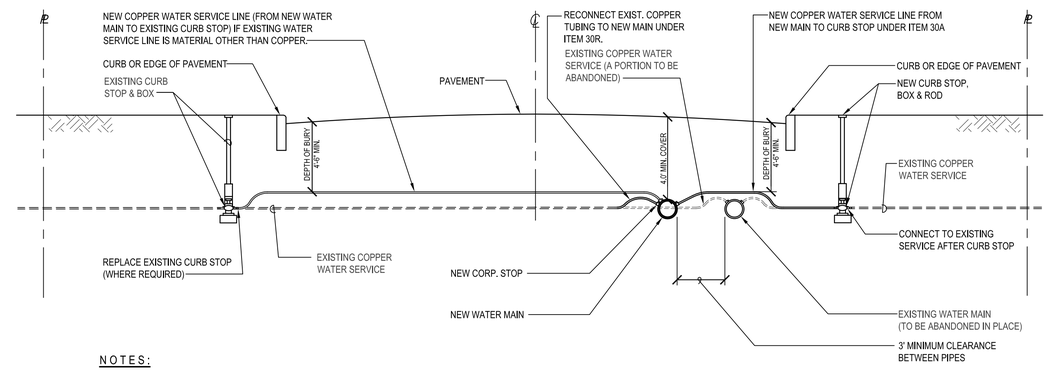

NOTES:

1. ALL SERVICES SHALL BE INSTALLED TO THE STANDARDS OF THE MANHASSET-LAKEVILLE WATER DISTRICT.

2. CONTRACTOR SHALL LOCATE EXISTING CURB STOP WHERE BOX IS NOT EXPOSED.

5 Water Service Reconnection Detail
NO SCALE

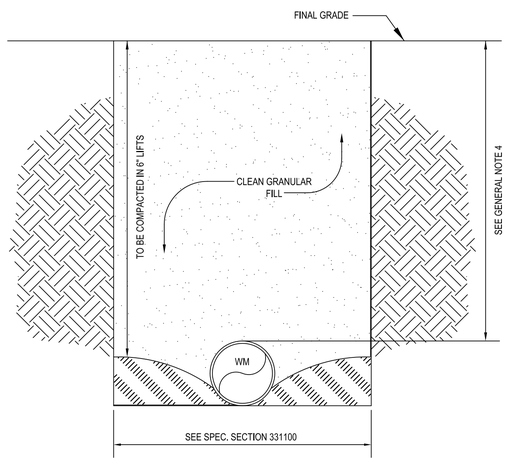

6 Typical Trench Detail
NO SCALE

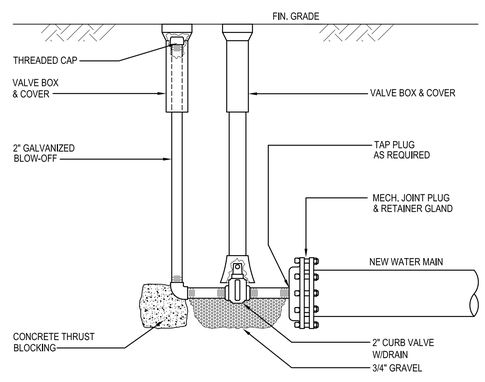

7 Temporary 2" Blow-off Detail
NO SCALE

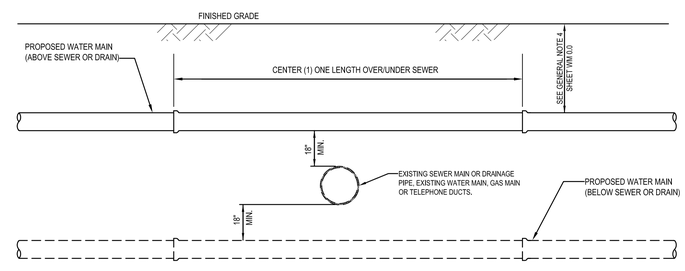

8 Water Main Crossing Detail
NO SCALE

H 2 M architects + engineers

538 Broad Hollow Road
4th Floor East
Melville, NY 11747
P:(631)756-8000
F:(631)694-4122

Melville, NY 11747
Albany, NY 12205
New York, NY 10001
White Plains, NY 10604
New City, NY 10956
Parsippany, NJ 07054
Howell, NJ 07731

CONSULTANTS:

MARK	DATE	DESCRIPTION

PROJECT #: MLWD 15-51
DATE: DECEMBER 2015
DESIGNED BY: DJR
DRAWN BY: SLM
CHECKED BY: REVIEWED BY:

SEAL

"ALTERATION OF THIS DOCUMENT EXCEPT BY A LICENSED PROFESSIONAL IS A VIOLATION."

CLIENT

Manhasset-Lakeville Water District

Installation of Water Mains & Appurtenances

Grandview Circle & Summit Drive

CONTRACT

MLWD CONTRACT NO. 2016-02

STATUS

REGULATORY REVIEW

SHEET TITLE

PIPING DETAILS

SHEET #

WM 2.0

M:\cadd\MLWD\1551 – Grandview Circle\04_DETAILS.dwg Last Modified: Dec 15, 2015 – 5:12pm Plotted on: Dec 30, 2015 – 10:14am By smirra

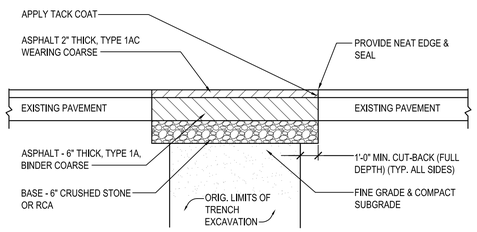

1 Town of North Hempstead Asphalt Restoration
Colonial Parkway
NO SCALE

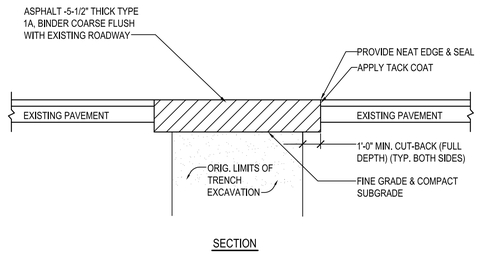

2 Village Asphalt Road Restoration
Summit Drive
NO SCALE

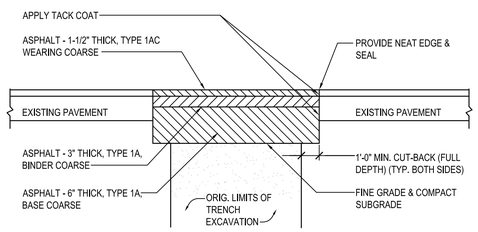

3 Town Asphalt Road Restoration
Plandome Road
NO SCALE

NOTES:

1. BASE ASPHALT OR TEMPORARY PAVEMENT TO REMAIN IN PLACE FOR A MINIMUM OF 14 DAYS PRIOR TO THE PLACEMENT OF THE ASPHALT WEARING COARSE AND SHALL BE MAINTAINED BY THE CONTRACTOR UNTIL FINAL RESTORATION IS COMPLETE, AT NO ADDITIONAL CHARGE.

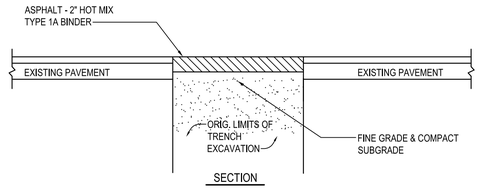

4 Temporary Asphalt Detail
NO SCALE

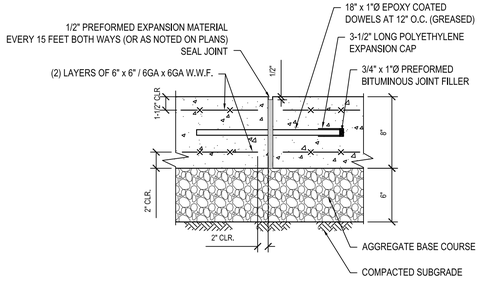

NOTE:

1. CONCRETE TO ACHIEVE 4,000 P.S.I. STRENGTH AT 28 DAYS.
2. APPLY BROOM FINISH PERPENDICULAR TO PRIMARY DIRECTION OF TRAVEL.
3. WHEN ABUTTING EXISTING CONCRETE PAVEMENT, DRILL AND GROUT DOWELS INTO EXISTING CONCRETE.
4. COMPACT SUBGRADE TO 95% MAXIMUM DENSITY IN ACCORDANCE WITH ASTM D1557.

5 Concrete Pavement Detail
NO SCALE

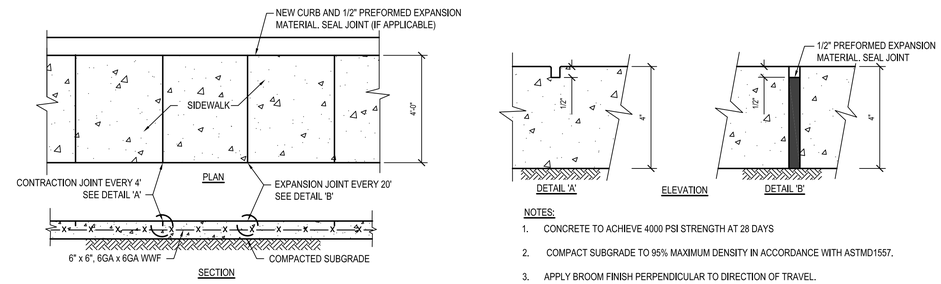

NOTES:

1. CONCRETE TO ACHIEVE 4000 PSI STRENGTH AT 28 DAYS
2. COMPACT SUBGRADE TO 95% MAXIMUM DENSITY IN ACCORDANCE WITH ASTMD1557.
3. APPLY BROOM FINISH PERPENDICULAR TO DIRECTION OF TRAVEL.

6 Concrete Sidewalk Restoration Detail
NO SCALE

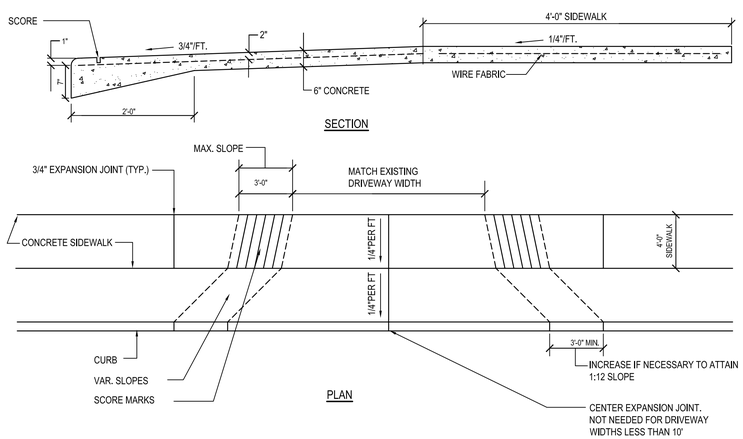

7 CONCRETE DRIVEWAY AND SIDEWALK DETAIL
NO SCALE

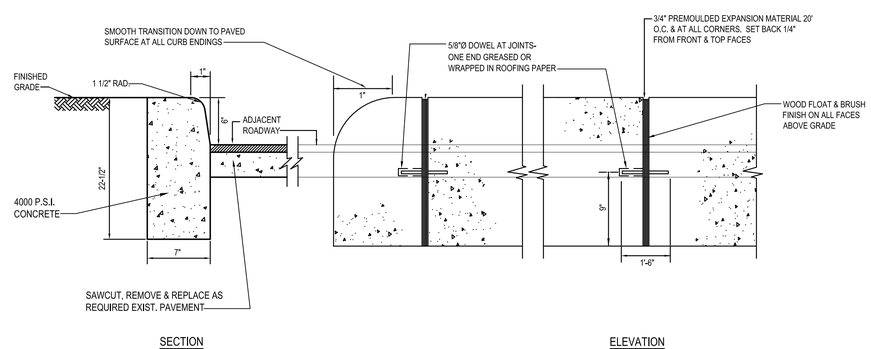

8 Concrete Curb Detail
NO SCALE

H 2 M architects + engineers

538 Broad Hollow Road
4th Floor East
Melville, NY 11747
P:(631)756-8000
F:(631)694-4122

Melville, NY 11747
Albany, NY 12205
New York, NY 10001
White Plains, NY 10604
New City, NY 10956
Parsippany, NJ 07054
Howell, NJ 07731

CONSULTANTS:

MARK	DATE	DESCRIPTION

PROJECT #: MLWD 15-51
DATE: DECEMBER 2015
DESIGNED BY: DJR
DRAWN BY: SLM
CHECKED BY: | REVIEWED BY:

SEAL

"ALTERATION OF THIS DOCUMENT EXCEPT BY A LICENSED PROFESSIONAL IS ILLEGAL"

CLIENT

Manhasset-Lakeville Water District

Installation of Water Mains & Appurtenances

Grandview Circle & Summit Drive

CONTRACT

MLWD CONTRACT NO. 2016-02

STATUS

REGULATORY REVIEW

SHEET TITLE

RESTORATION DETAILS

SHEET #

WM 2.1

M:\cadd\MLWD\1551 – Grandview Circle\04_DETAILS.dwg Last Modified: Dec 15, 2015 – 5:12pm Plotted on: Dec 30, 2015 – 10:14am By smirra